LOCKS & HANDLES

C70 STAINLESS STEEL SWING HANDLE (PADLOCKING)

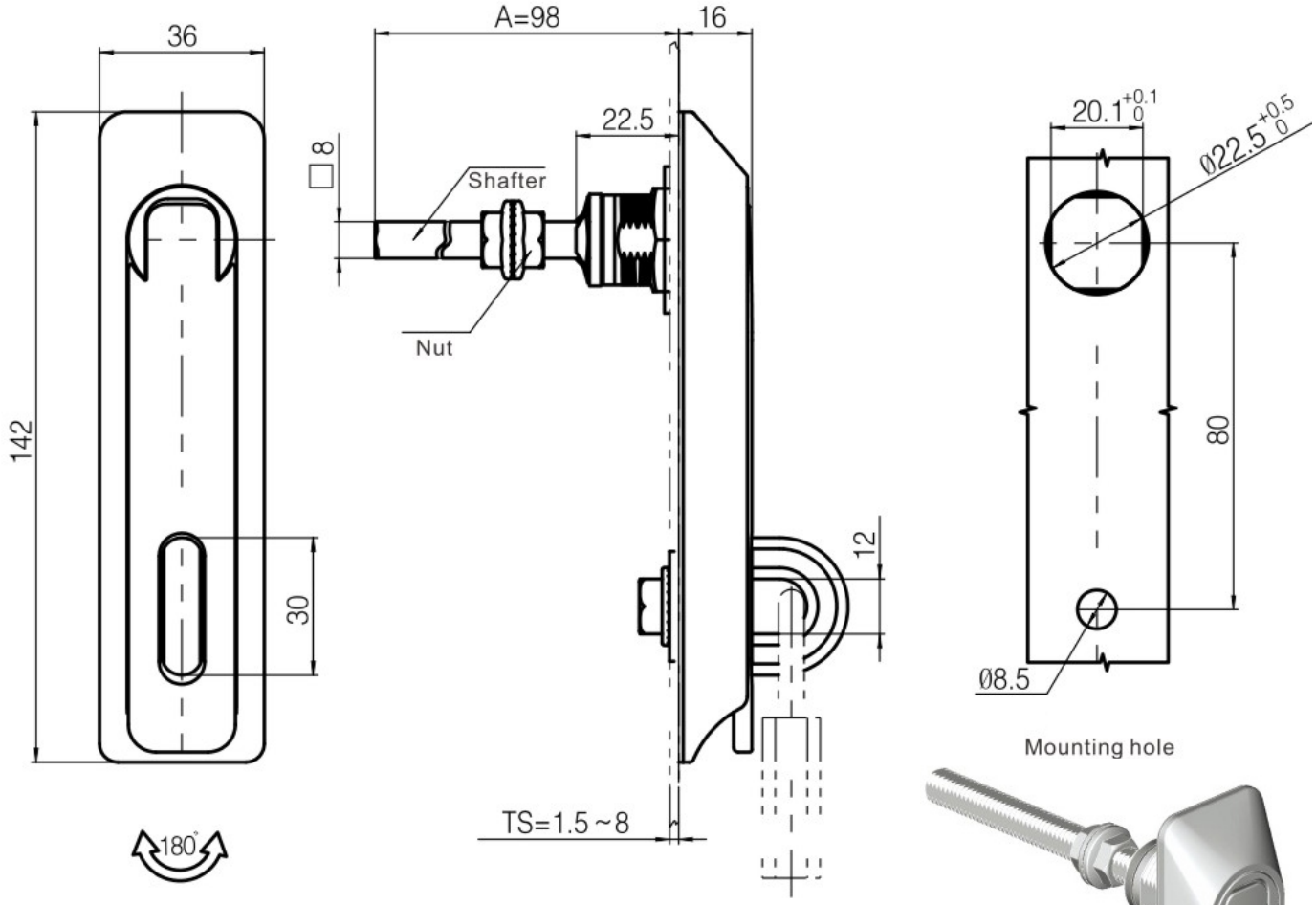

PART NO.	DESCRIPTION
AS-GH1107PDLKSS	Stainless steel swing handle, padlocking, long shaft

I.R.S. RUBBER HARDWARE TAPES SEALANTS
1300 767 567

WA Store: 148 Welshpool Road, Welshpool 6106
QLD Store: 17 Alexandra Place, Murarrie 4172
Email: websales@indrub.com.au

www.indrub.com.au