Gas Struts 10mm dia.

- Door weight (X)
- Door length (Y)
- Distance between the door hinging and the gas springs fixing point onto the door (Z)
- Number of gas springs (N)
- Gas spring thrust pressure (S)

The Formula to be applied to this calculation of (S):

$$S = \frac{X \times Y}{2\,N \times Z} + 5\ \text{Kg}$$

(+5 Kg. = constant added weight for the frictions)

Example:
- Door weight (X) – 40kg
- Door length (Y) – 1.5m
- Distance (Z) – 0.23
- Number of gas springs (N) – 2

$$S = \frac{40 \times 1{,}5}{(2x2) \times 0.23} + 5\ \text{Kg} = 70.200\text{kg./P}$$

Therefore two 70kg gas springs have to be fitted.

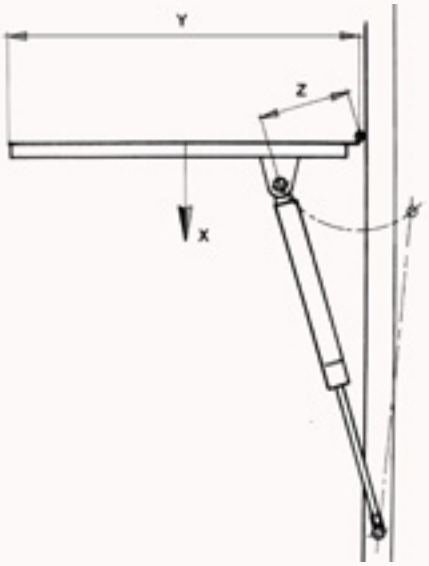

Code	Description	Pressure
GSK50N-716-10-BK to GSK1100N-716-10-BK	GAS STRUT 10MM DIA. SHAFT X 22MM DIA. TUBE	50 - 1100N

FEATURES

- Lengths: 525, 716, 816, 830
- Nitrile shaft
- Non corrosive components
- Made to European standard
- Custom labels if required
- Metal ends standards

FOR ENQUIRIES:

Call us on: 1300 767 567
WA Store: 102 Briggs Street Welshpool WA 6106
QLD Store: 2/17 Alexandra Place Murarrie QLD 4172
Email: websales@indrub.com.au
Web: www.indrub.com.au

I.R.S. RUBBER HARDWARE TAPES SEALANTS