AS-70 *Series* *Draw Latch (Adjustable Type)*

AS-703NL

AS-702NL

AS-701NL

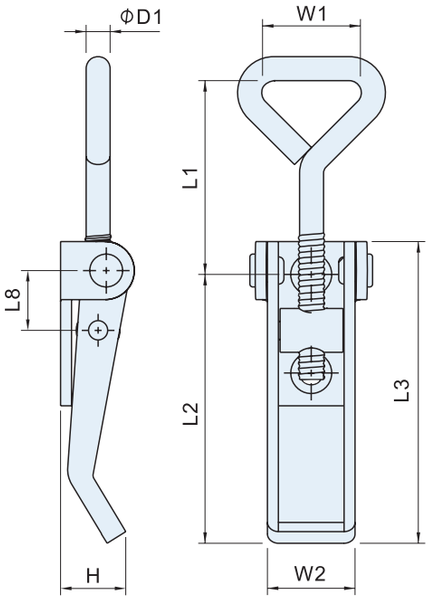

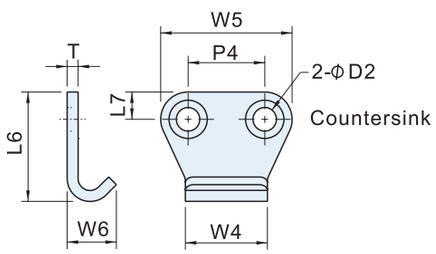

AS-703NL

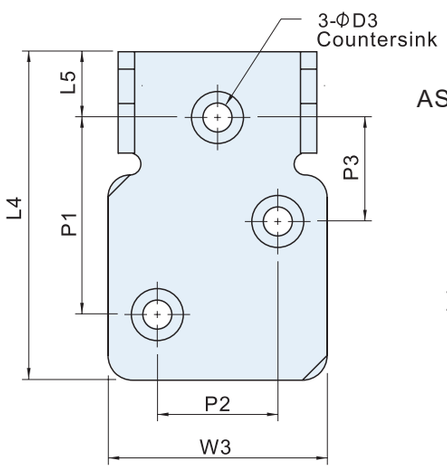

AS-701NL AS-702NL

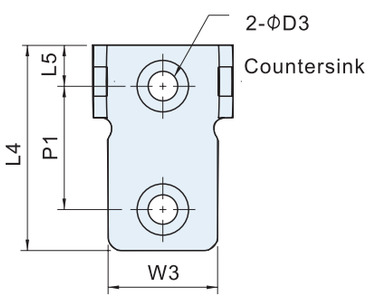

MATERIAL AND FINISH

- Cold-rolled Steel (SPCC), Zinc plated.
- Stainless steel (SUS304), Vibration ground.

FEATURES

- Adjustable latch rod, user can adjust the suitable compression force.
- Non-Lock Hole.

SPECIFICATIONS: Unit:mm

Item No.	Material	Dimensions																							Load capacity (kg)	Weight (g)
		L1	L2	L3	L4	L5	L6	L7	L8	W1	W2	W3	W4	W5	W6	H	P1	P2	P3	P4	D1	D2	D3	T		
AS-701NL	SUS304	35~42	49	55	30	6	20	5	11	18.2	16	16	15	24	10.6	11.8	18			14	4.4	4.3	4.3	2	65	45
	SPCC																								70	
AS-702NL	SUS304	50~65	53	67	42	14	22	6	12	21.4	20	25	17	30	13.3	16.4	17			17	5.3	5.3	5.3	2.5	85	86.8
	SPCC																								80	
AS-703NL	SUS304	54~70	86	98	60	12	29	7.5	15	34	30	40	22	45	17	19.4	36	22	19	22	7.0	5.3	5.3	3	95	208.4
	SPCC																								90	